EKB-Produkter AB

VENTILATOREN

LOT6
2018

F400

SMOKE EXTRACT FANS

THE NEW PRODUCT RANGES FOR MORE SAFETY

UP TO 200ºC CONTINUOUS OPERATION | 400ºC / 120 MIN.

EKB-Produkter AB Sweden Ph +46 43522630 www.ekb.se ekb@ekb.se

MPS...D F4

- Dual-Use 400 ºC / 120 min. and 200 ºC continuous operation
- Double skinned, steel sheet casing with 40 mm mineral wool insulation
- Three possible exhaust directions: right / left / upwards
- Backward curved centrifugal impeller with screw tight hub and with Taperlock shaft-hub connection
- Casing base conceived with integrated drain
- Max. airflow rate 11.800 m³/h

MPC...D F4 T

- Dual-Use 400 ºC / 120 min. and 200 ºC continuous operation
- Innovative motor cooling concept
- Double skinned, steel sheet casing with 30 mm mineral wool insulation
- Three possible exhaust directions: right / left / upwards
- Backward curved centrifugal impeller with screw tight hub and with Taperlock shaft-hub connection
- Casing base conceived with integrated drain
- Max. airflow rate 17.500 m³/h

MPC...D F4 TI

- Dual-Use 400 ºC / 120 min. and 200 ºC continuous operation
- Double skinned, steel sheet casing with 30 mm mineral wool insulation
- Linear airflow
- Backward curved centrifugal impeller with screw tight hub and with Taperlock shaft-hub connection
- Integrated drain
- Max. airflow rate 12.100 m³/h

The new fans are certified for the temperature class F400 according to the European product requirements and testing standard DIN EN 12101-3. They allow a medium temperature of up to 400 ºC / 120 min. They are additionally suitable for continuous operation of up to 200 ºC medium temperature.

All smoke extract fans are driven by frequency controllable IE3 premium efficiency motors. The motors are outside of the airflow and have a special shaft sealing, which prevents oil and water from entering over the shaft.

DVN...D F4

DVNI...D F4

- Dual-Use 400 ºC / 120 min. and 200 ºC continuous operation
- Innovative motor cooling concept
- Casing made of seawater-resistant aluminium, base plate and inlet cone are made of galvanized sheet steel
- Backward curved centrifugal impeller with screw tight hub and with Taperlock shaft-hub connection
- Integrated grease pan with drain
- Max. airflow rate 14.300 m³/h

- Dual-Use 400 ºC / 120 min. and 200 ºC continuous operation
- Innovative motor cooling concept
- Sound insulated casing
- Casing made of seawater-resistant aluminium, base plate and inlet cone are made of galvanized sheet steel
- Backward curved centrifugal impeller with screw tight hub and with Taperlock shaft-hub connection
- Integrated grease pan with drain
- Max. airflow rate 14.300 m³/h

MOTOR TECHNOLOGY

- IE3 premium efficiency standard motors in protection class IP55
- Motors have a special shaft sealing, which prevents oil and water from entering over the shaft
- High energy efficiency at full and part load range
- Control with frequency converter in protection class IP66 with Fire-Mode function

ELECTRICAL ACCESSORIES

Frequency converter
IP 66

Potentiometer
MTP

Constant pressure control
CON P1000

Motor protection switch
MS

MECHANICAL ACCESSORIES

MPS...D F4

Weather protection hood

Wall bracket

MPC...D F4 T

Base frame

Panel with spigot

Inlet spigot

Rain cover

Closed panel

MPC...D F4 TI

Panel with condensate drains

DVN/DVNI...D F4

Flat roof socket

Sloped roof socket

Inlet flange

Roof adapter plate

INSTALLATION EXAMPLE

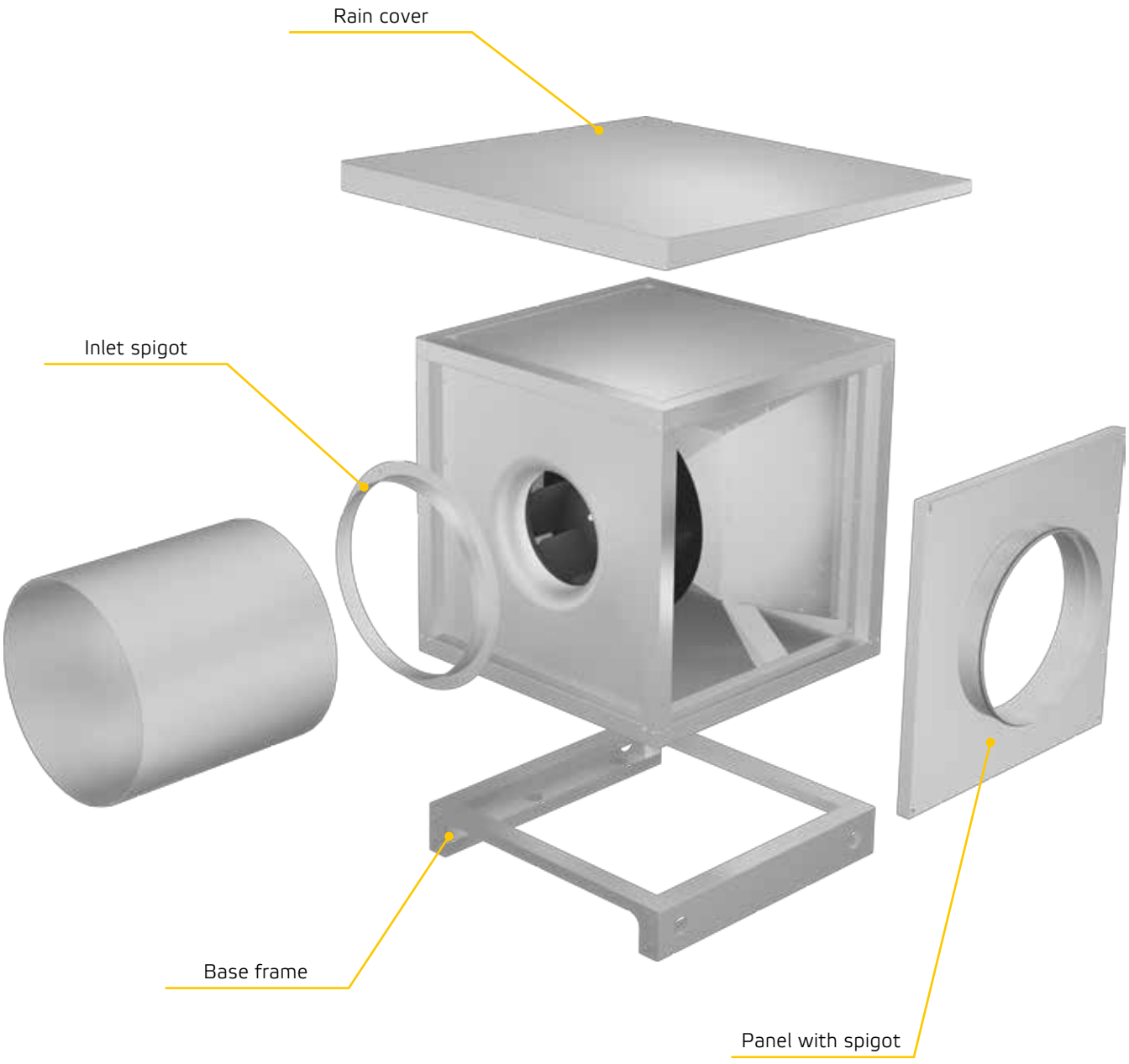

APPLICATION EXAMPLE SMOKE EXTRACT FANS

Office building with restaurant on top

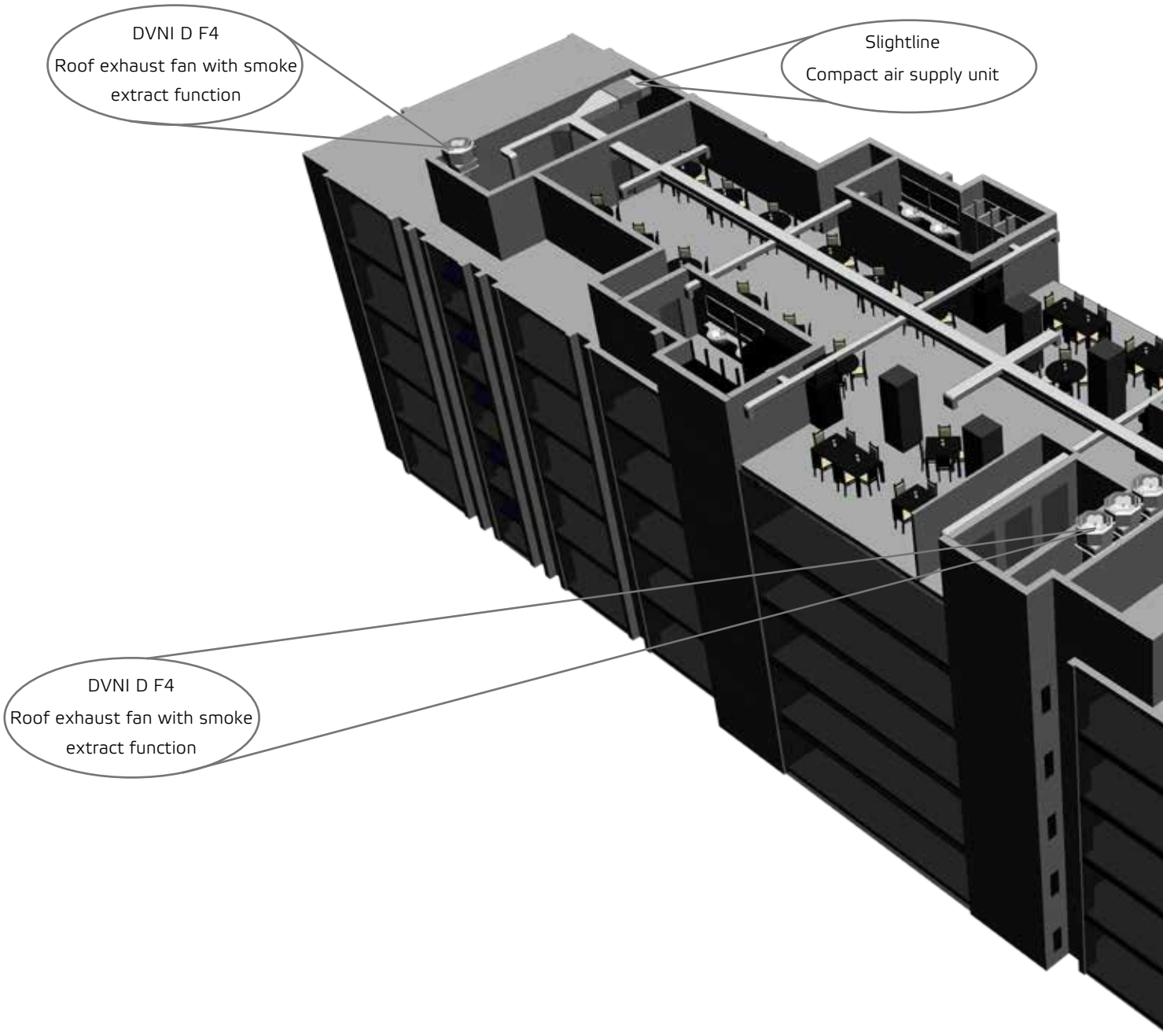

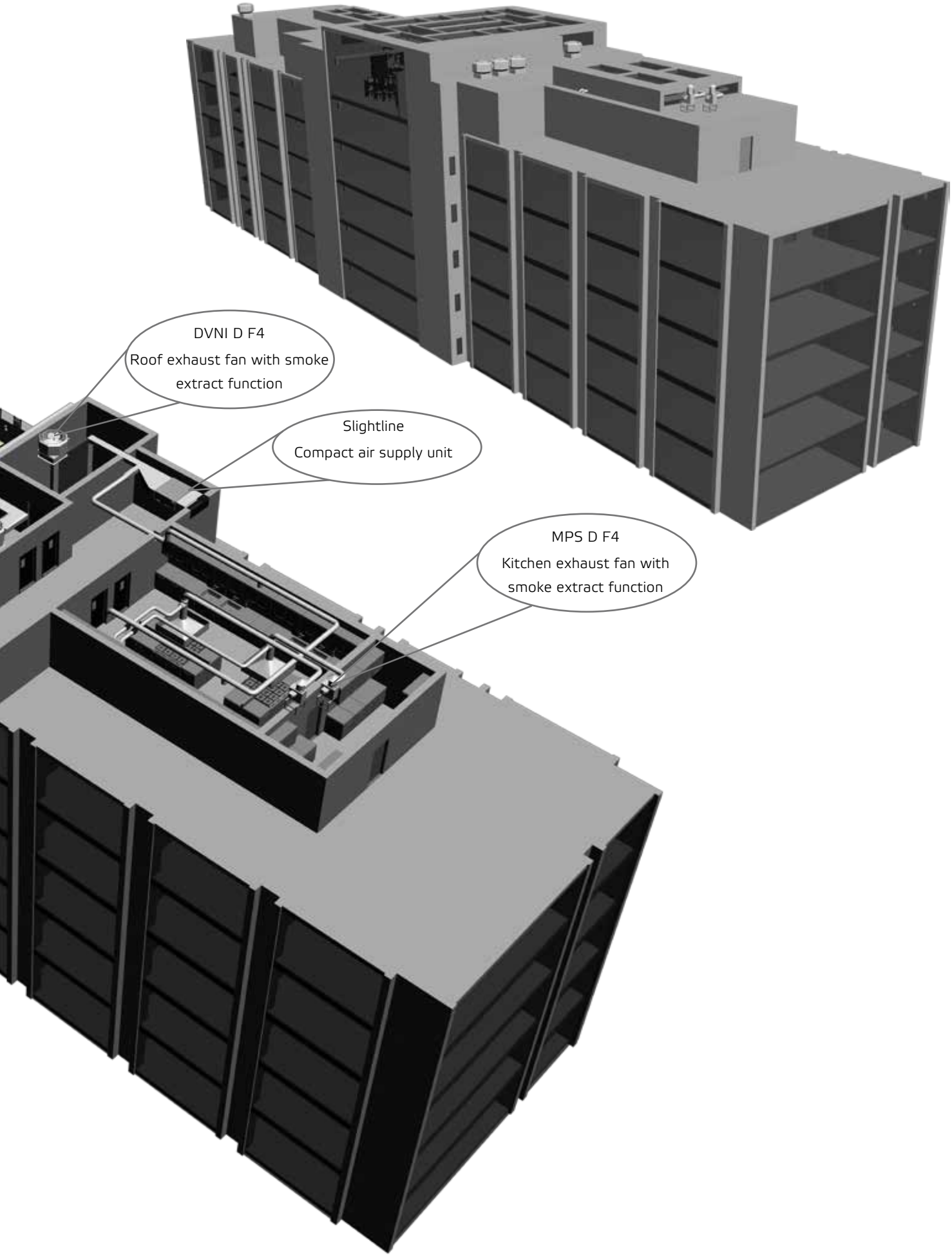
DVNI D F4
Roof exhaust fan with smoke extract function
Slightline
Compact air supply unit
MPS D F4
Kitchen exhaust fan with smoke extract function